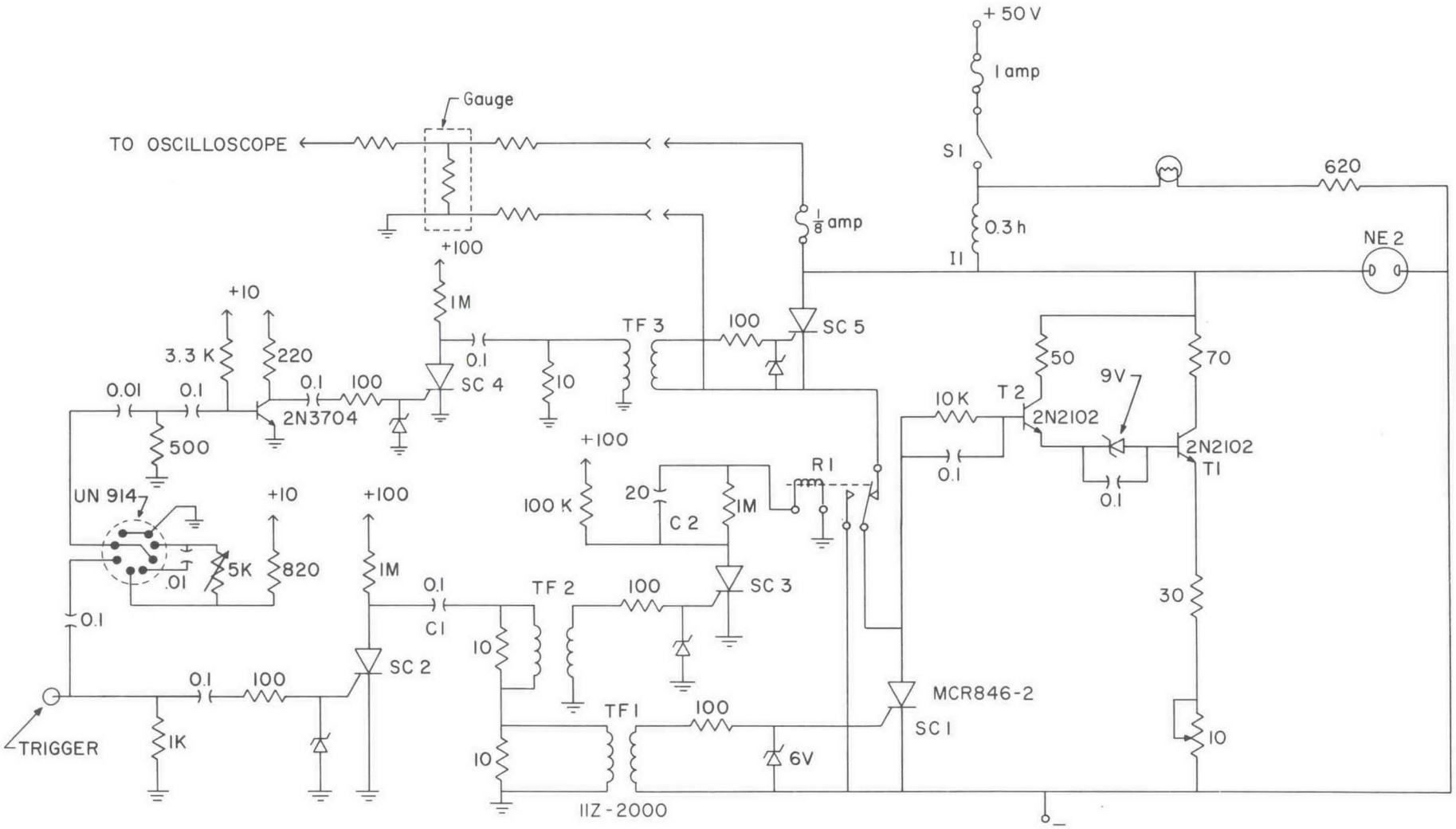

Fig. 22. Schematic of manganin gauge constant current supply.